HSF RoHS c UL us CE

SPECIFICATIONS

Rated(额定参数)：150V,5A
Dielectric strength(抗电强度)：AC2000V/1 Minute
Insulation Resistance(绝缘电阻):1000MΩ Min
Contact Resistance(接触电阻):20mΩ Max
Wire Range(线径):20~26AWG
Strip length(剥线长度):11mm
Temp. range(操作温度)：-40℃~+105℃
MAX Soldering(瞬时温度):+250°C,5s

Housing Material(塑件)：PA66 (UL94 V-0)
Contact(端子)：Brass，Tin plating(黄铜镀锡)
Reed(弹片)：Stainless seel (不锈钢)

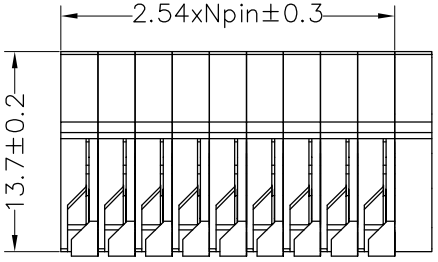

Recommended P.C.B Layout(Top Side)

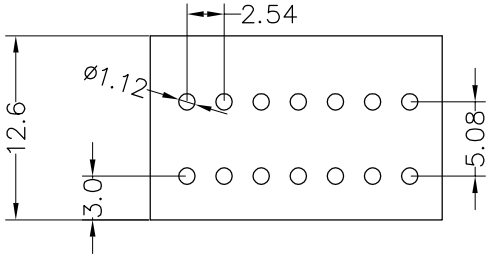

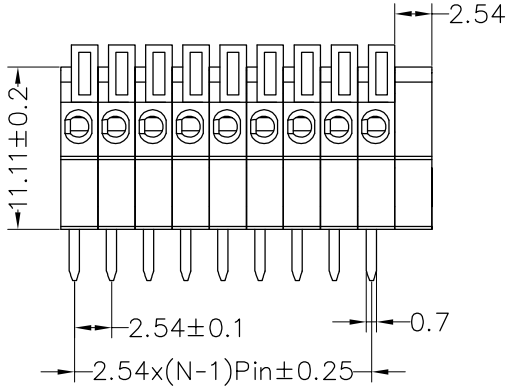

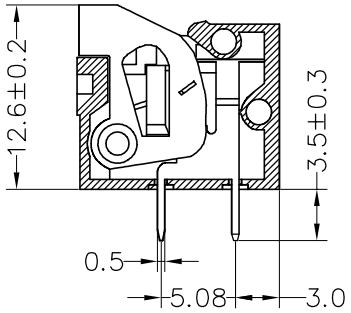

Ordering Information

JL 141R - 254 XX G X 1

- Pitch: 254=2.54PH
- No.of pins: 1P-XXP
- Housing Color: B=Black, G=Green, U=Blue, R=Red, W=White, Y=Yellow, O=Orange, E=Grey
- Packing: 0=Pe bag, T=Tube, A=Tray

REV	DATE	MODIFICATION DESCRIPTION	CHANGE
A0	2018.09.08	NEW DRAWING	

OPERATION	
X.X	±0.30
X.XX	±0.20
X.XXX	±0.10
Angle	±3°
DIM	TOL

DRAW	yiyusheng	18.09.08
CHECK		
APPROVE		

SCALE	FIT
UNIT	mm
SIZE	A4
SHEET	1/1
PROJ.	

BESTCONN(WUHAN) TECHNOLOGY CO.LTD
https://bscconnector.com/

PART NO.	JL141R-254XXGX1
TITLE:	2.54mm PCB SPRING TERMINAL BOLCKS