HSF RoHS

FILE NO :E362810

SPECIFICATIONS
Rated Current:1.0AMP
Contact Resistance:20mΩ Max
Withstand Voltage:500V AC/DC
Insulation Resistance:1000MΩ Min
Operation Temperature:−40°c to +105°c

Contact Material:Brass
Contact Plating:Au or Sn Over Ni
Insulator Material:Polyester(UL94V−0)
Standard: PA6T
Max.Processing Temp: 230°C for 30−60 seconds
(260°C for 10 seconds)

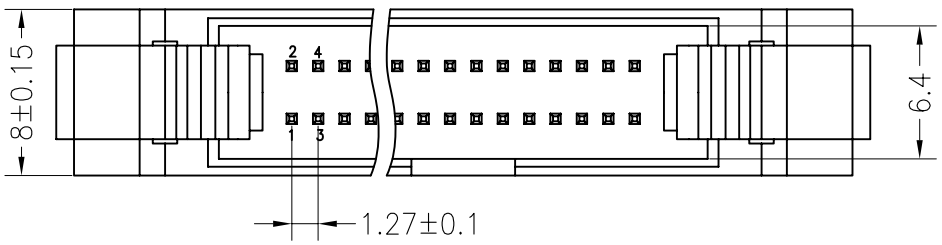

Recommended P.C.B Layout(Top Side)
(PCB BOARD TOLERANCE±0.05)

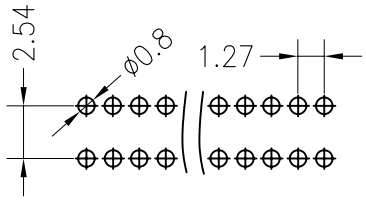

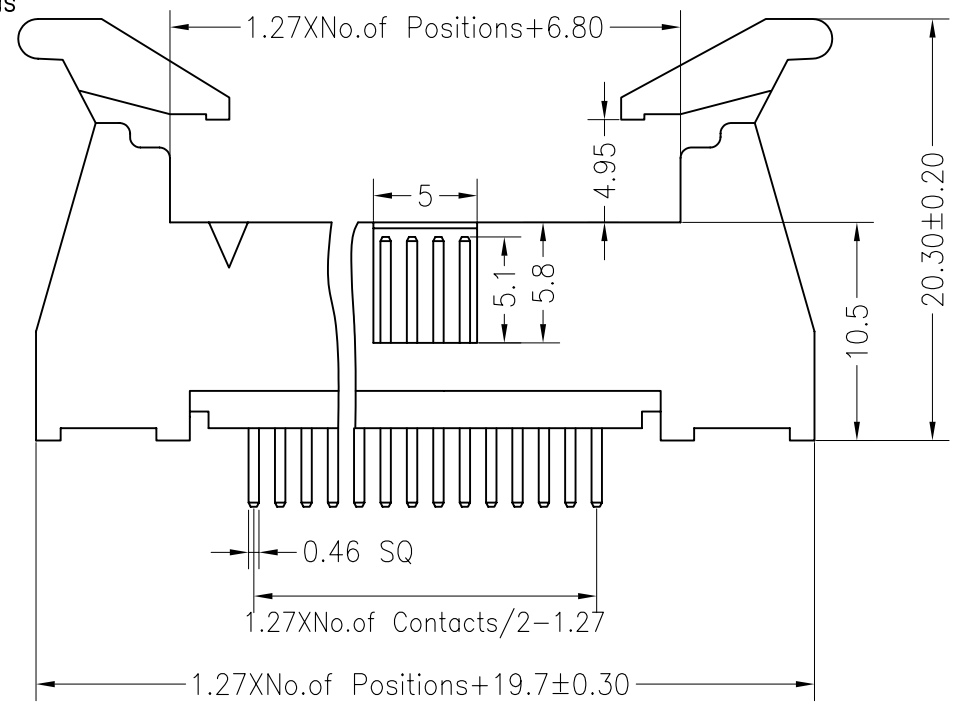

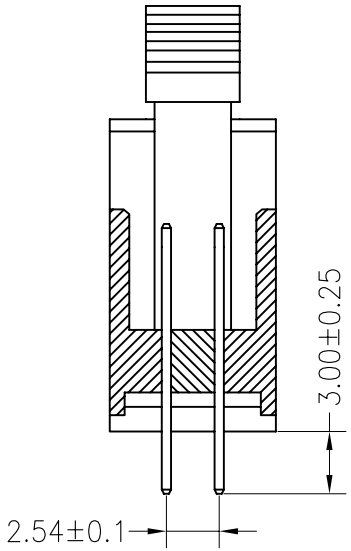

Ordering Information

3340 XX S XX X X L X 01

- No.of Pins: 10−−100
- Contact Plating: G0:Gold Flash; G2:5U" Gold; G3:10U" Gold; G4:15U" Gold; G5:30U" Gold; S0:Gold Flash/Tin; SN:Tin
- Insulator Material Option: A=BK−PBT; B=BK−PA66; C=BK−PA6T; D=BK−PA46; F=BK−LCP
- Color Type: B=Black; G=Grey
- Packing: T=Tube; A=Tray; P=Tube+Cap

REV	DATE	MODIFICATION DESCRIPTION	CHANGE
A0	2012.10.05	NEW DRAWING	

OPERATION	
X.X	±0.30
X.XX	±0.20
X.XXX	±0.10
Angle	±3°
DIM	TOL

DRAW	YiYuSheng	12.10.05
CHECK		
APPROVE		

SCALE	FIT
UNIT	mm
SIZE	A4
SHEET	1/1
PROJ.	

BESTCONN(WUHAN) TECHNOLOGY CO.,LTD
https://bscconnector.com/

PART NO.	3340XXSXXXXLX01
TITLE:	1.27*2.54mm ejector header Npin 180°