HSF RoHS

SPECIFICATIONS
Rated Current:1.0AMP
Contact Resistance:20mΩ Max
Withstand Voltage:500V AC/DC
Insulation Resistance:1000MΩ Min
Operation Temperature:−40°c to +105°c

Contact Material:Brass/Phosphor bronze
Contact Plating:Au or Sn Over Ni
Insulator Material:Polyester(UL94V−0)
Standard: PBT
Max.Processing Temp: 180°C for 30−60 seconds
(200°C for 10 seconds)

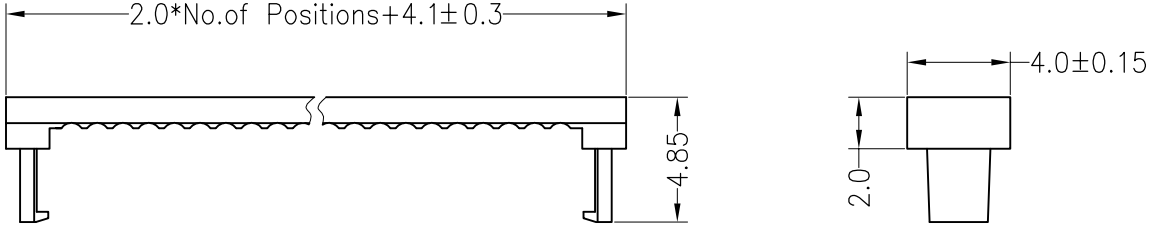

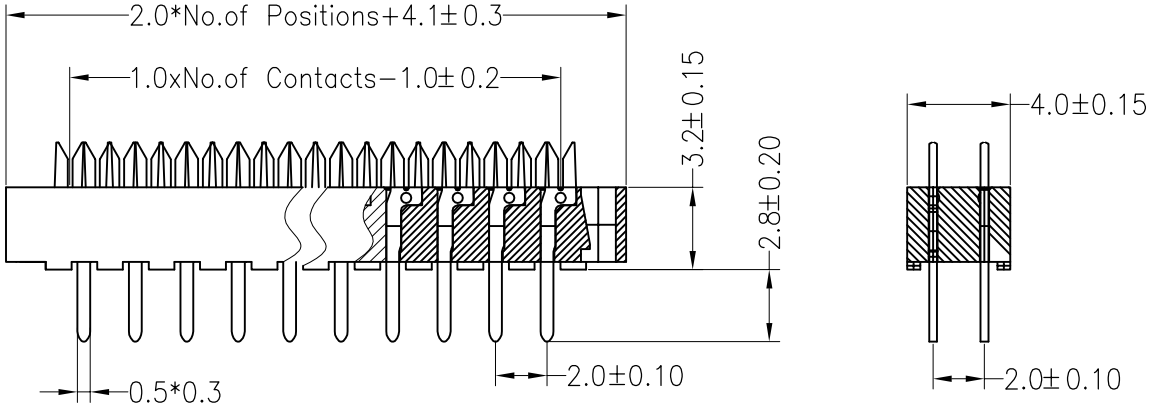

Ordering Information

5420 XX X XX B 01

- No.of Pins: 04~80P
- Type: B=Brass, P=Phosphor bronze
- Contact Plating: SN:Tin, G0:Gold Flash, G2:5U"Gold, G3:10U"Gold, G4:15U"Gold, G5:30U"Gold, S0:Gold Flash/Ni
- Color Type: B=Black, G=Grey

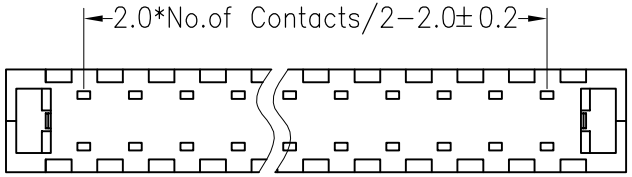

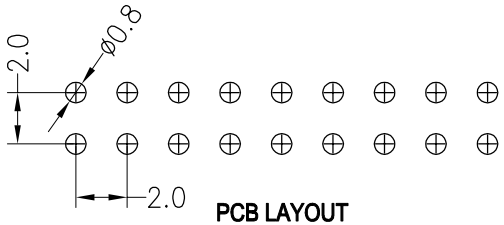

PCB LAYOUT

REV	DATE	MODIFICATION DESCRIPTION	CHANGE
A0	2019.01.15	NEW DRAWING	

OPERATION	
X.X	±0.30
X.XX	±0.20
X.XXX	±0.10
Angle	±3°
DIM	TOL

DRAW	YiYuSheng	19.01.15
CHECK		
APPROVE		

SCALE	FIT
UNIT	mm
SIZE	A4
SHEET	1/1
PROJ.	

BESTCONN(WUHAN) TECHNOLOGY CO.,LTD
https://bscconnector.com/

PART NO.	5420XXXXXB01
TITLE:	2.00 DIP Connector NPin